DEPARTMENT OF ELECTRONICS & COMMUNICATION ENGINEERING

AMC PBL Report

Design of a 1 kHz Band-Pass Filter using LM324

Submitted by

ABHINAV RACHA BATTUNI
1RV24EC006

D SWANITH
1RV24EC057

DAKSH REDDY
1RV24EC058

Under the Guidance of:

Guide Name:
Dr. Srividya P
Designation:
Assistant Prof.

2025 - 26

1. Introduction

Active filters are essential components in modern electronics, designed to allow specific frequency ranges to pass while effectively attenuating unwanted signals. Band-pass filters, in particular, are indispensable in audio processing, wireless communication, and precision signal conditioning systems where isolating a specific frequency "band" is required.

By utilizing operational amplifiers (op-amps) paired with RC components, active band-pass filters offer significant advantages over passive designs. Specifically, they provide superior gain control and much better impedance matching, ensuring that the filter can drive a load without signal degradation.

This project focuses on the design and implementation of a 1 kHz Multiple Feedback (MFB) band-pass filter using the LM324 op-amp. To enhance the practical utility of the design, the circuit includes an integrated LED indication system, providing a visual confirmation whenever the target 1 kHz signal is processed.

2. Problem Statement

Practical signals often suffer from noise distortion and the limitations of passive filters, which lack the necessary gain and impedance matching for clean signal processing. Consequently, there is a need for an active 1 kHz band-pass filter to provide selective amplification and reliable performance for laboratory applications.

3. Objectives

Primary Objectives: Technical Design & Performance

- 1 kHz Filter Implementation: Design and construct a Multiple Feedback (MFB) band-pass filter using the LM324op-amp to achieve a precise 1 kHz center frequency.
- Performance Verification: Experimentally measure the cutoff frequencies and bandwidth to verify the filter's selectivity and its ability to suppress unwanted noise.

Secondary Objectives: Signal Processing & Indication

- **Signal Conversion & Smoothing:** Implement a rectifier and RC network to convert the filtered AC signal into a stable DC voltage for reliable detection.
- **Comparator-Based Visual Feedback:** Design a comparator circuit to trigger an LED, providing a clear visual indication whenever the input signal is within the 1 kHz passband.

4. Methodology

Schematic Design & Implementation

This section details the hardware architecture used to achieve frequency selection and visual notification.

- **Active Filter Stage:** The core uses a Multiple Feedback (MFB) topology centered around the LM324 (U2A), featuring an input network of R1, R2, and C1 to define the passband.
- **Precision Rectification:** The filter output is processed through a bridge rectifier circuit (D1–D4) to convert the 1 kHz AC signal into a pulsating DC voltage.
- **Smoothing & Thresholding:** An RC filter (R4 and a 10µF capacitor) smooths the rectified signal into a stable DC level, which is then compared against a reference voltage set by potentiometer RV1.
- **Visual Output:** The second op-amp stage (U2B) acts as a comparator, driving an LED (D5) through a current-limiting resistor (R5) when the signal strength exceeds the set threshold.

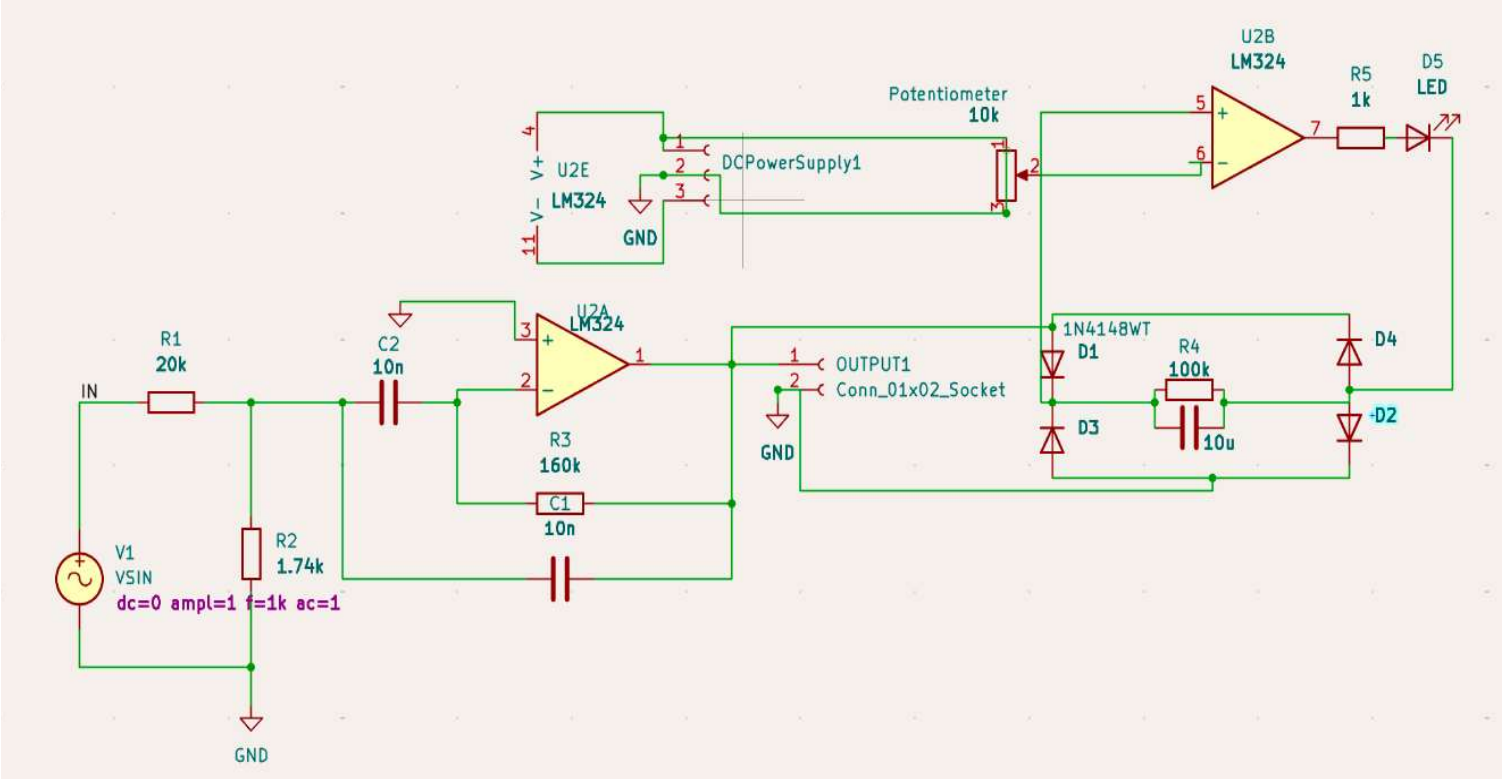

Schematic

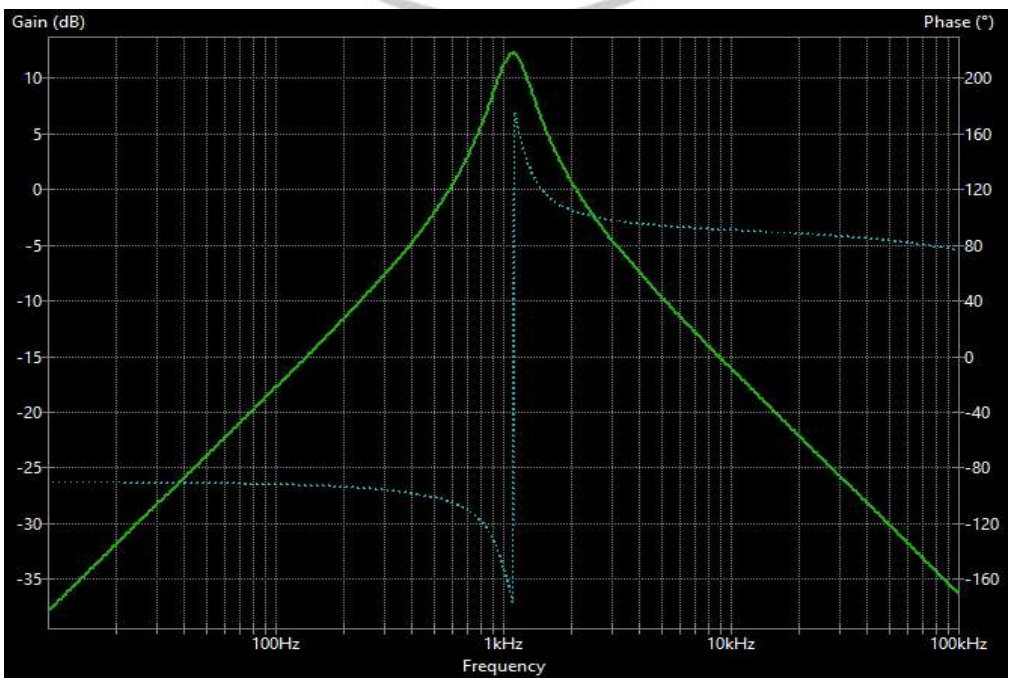

Simulation

Design Equations & Specifications

This section outlines the mathematical foundations used to calculate the component values visible in the schematic.

Category	Parameter / Description	Formula / Value
Filter Topology	Multiple Feedback (MFB) 2nd Order	H(s) = [-(1 / R1C)s] / [s^2 + (2 / R3C)s + (R1+R2) / (R1R2R3*C^2)]
Frequency Specs	Center Frequency (fc)	1 kHz (w_center = 1 / sqrt((R1 | | R2) * R3 * C))
Selectivity	Quality Factor (Q)	Q = w_center / w_BW (Approximately 5)
Capacitors	C1, C2	10 nF (Identical capacitors used)
Input Resistor	R1	20 kOhm (R1 = R3 / 2K)
Shunt Resistor	R2	1.74 kOhm (R2 = R3 / (4Q^2 - 2K))
Feedback Resistor	R3	160 kOhm (R3 = 2Q / (w_center * C))
Detection Stage	Visual Indication	Rectifier -> RC Smoother -> Comparator -> LED

RASHTREEYA SIKSHANA SAMITHI TRUST ®

❖ **Transfer Function:**

$$H(s) = \frac{V_o(s)}{V_i(s)} = \frac{-\frac{1}{R_1C}s}{s^2 + \frac{2}{R_3C}s + \frac{1}{(R_1||R_2)R_3C^2}} \qquad R_1||R_2 = \frac{R_1R_2}{R_1+R_2}$$

$$H(s) = \frac{V_o(s)}{V_i(s)} = \frac{-\frac{1}{R_1C}s}{s^2 + \frac{2}{R_3C}s + \frac{R_1+R_2}{R_1R_2R_3C^2}}$$

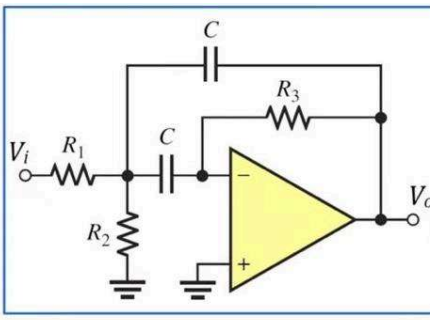

❖ **Standard Form 2nd Order Bandpass Filter:**

$$H(s) = \frac{K\omega_{BW}s}{s^2 + \omega_{BW}s + \omega_{center}^2}$$

with
- K is the passband gain
- ω_{BW} is the bandwidth (rad/sec)
- ω_{center} is the center frequency (rad/sec)

❖ **Comparing Terms:**

$$K\omega_{BW} = \frac{1}{R_1C} \qquad \omega_{BW} = \frac{2}{R_3C} \qquad \omega_{center} = \frac{1}{\sqrt{(R_1||R_2)R_3C}}$$

❖ **Design Equations:**

$$R_3 = \frac{2Q}{\omega_{center}C} \qquad R_2 = \frac{R_3}{4Q^2 - 2K} \qquad R_1 = \frac{R_3}{2K} \qquad Q = \frac{\omega_{center}}{\omega_{BW}}$$

5. Hardware and Software Requirements

Category	Component/Tool	Primary Use
Active Component	LM324 Op-Amp	Acts as the core for the MFB filter and the threshold comparator.
Passive Components	Resistors and Capacitors	Used to set the 1 kHz center frequency and 200 Hz bandwidth.
Prototyping	Breadboard & Wires	Used for physical circuit assembly and single-supply biasing.
Input Source	Function Generator	Provides the input frequency sweep to test filter response.
Measurement	CRO (Oscilloscope)	Used to observe and verify the input/output waveforms.
Detection Stage	Bridge Rectifier & Pot	Converts AC to DC and sets the detection threshold via RV1.
Visual Output	LED	Indicates when the signal is within the 1 kHz passband.
Simulation	LTspice	Used for pre-construction circuit simulation and analysis.
Design	KiCad	Used for creating the professional schematic and PCB layout.

RASHTREEYA SIKSHANA SAMITHI TRUST ® RV INSTITUTIONS

6. Implementation

The band-pass filter was implemented using discrete components on a breadboard. The LM324 op-amp was powered using appropriate biasing to support AC signal operation.

PCB Gerber Files

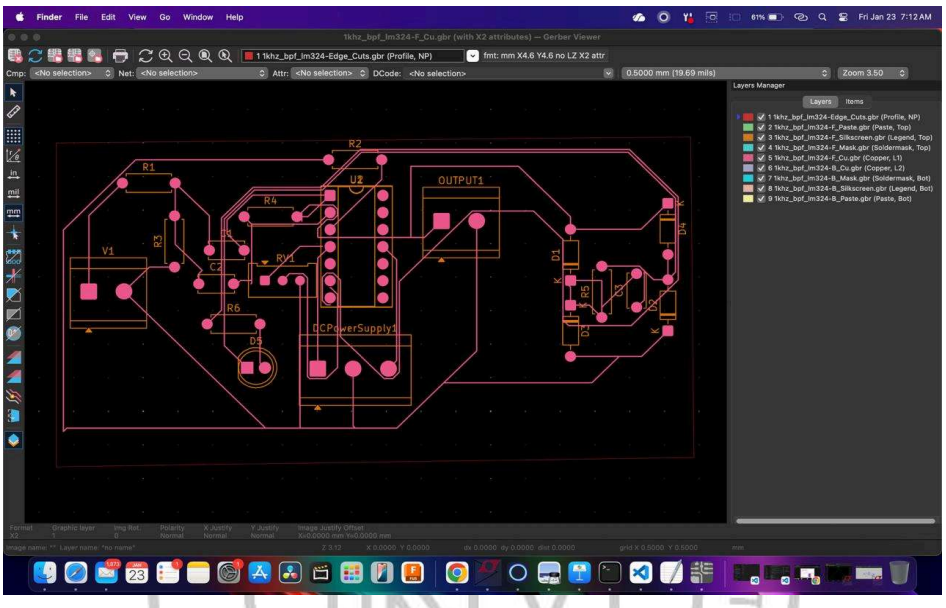

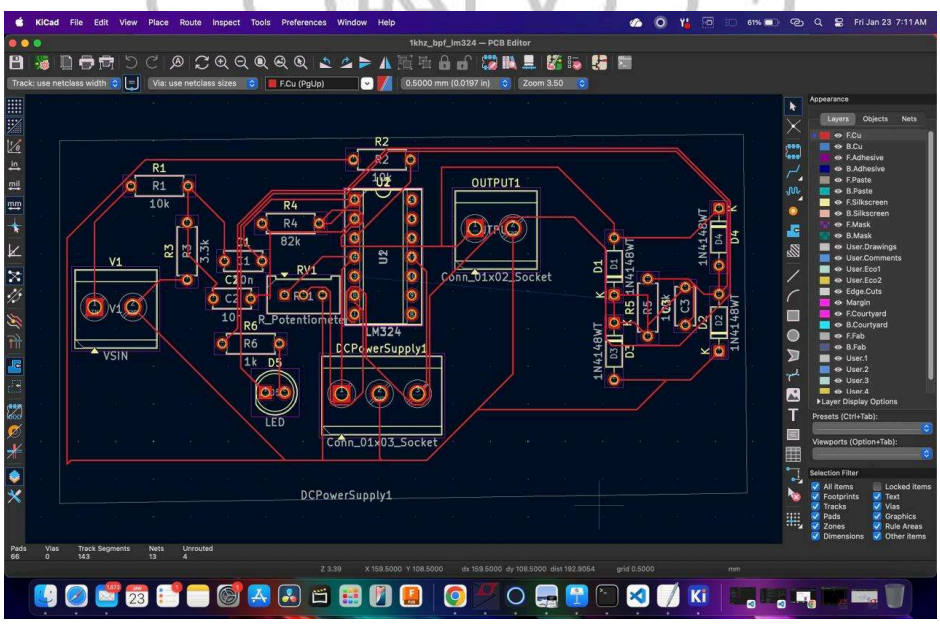

A sinusoidal input signal was applied using a function generator, and the output amplitude was observed on a CRO while sweeping the frequency from low to high values. The output of the filter was further connected to a bridge rectifier, potentiometer, and LED to visually indicate signal strength across frequencies.

7. Results and Discussion

- **Peak Response:** The filter achieved its maximum output amplitude at the targeted 1 kHz center frequency.
- **Measured Cutoffs:** Experimental testing identified the lower and upper cutoff frequencies at 930 Hz and 1120 Hz, respectively.
- **Practical Bandwidth:** The circuit maintained a precise 190 Hz bandwidth, nearly matching the 200 Hz design goal.
- **Performance Deviations:** Minor variations in frequency were caused by non-ideal component tolerances and internal op-amp limitations.
- **Visual Confirmation:** The LED successfully illuminated within the passband, verifying the threshold detection logic.

7.1 Comparison Between Theoretical and Experimental Results

Parameter	Theoretical Value	Experimental Value
Center Frequency	1 kHz	~1 kHz
Lower Cutoff Frequency	~900 Hz	930 Hz
Upper Cutoff Frequency	~1100 Hz	1120 Hz
Bandwidth	200 Hz	190 Hz

The results show good agreement between theoretical calculations and experimental observations, validating the design methodology.

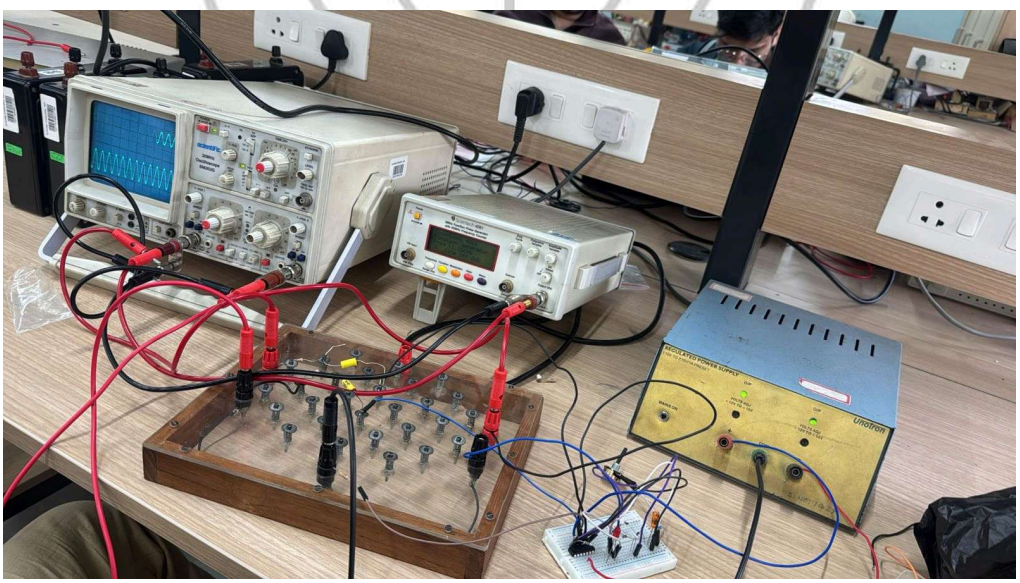

8. Conclusion

- A 1 kHz LM324 MFB band-pass filter was successfully implemented.
- The filter showed correct band-pass behavior.
- Experimental bandwidth was 180 Hz.

- Comparator and LED improved usability.
- The project reinforced analog filter design concepts.

List of References:

[1] Texas Instruments, "LM324 Low-Power Quad Operational Amplifiers Datasheet," TI Literature, 2023.

[2] Texas Instruments, "Multiple-Feedback (MFB) Band-Pass Filter Design," Application Report, Texas Instruments, 2016.

[3] Texas Instruments, "Active Filter Design Techniques," *Analog Applications Journal*, 2018.

[4] A. S. Sedra and K. C. Smith, *Microelectronic Circuits*, 7th ed. Oxford, UK: Oxford Univ. Press, 2015.

[5] S. Franco, *Design with Operational Amplifiers and Analog Integrated Circuits*, 4th ed. New York, NY, USA: McGraw-Hill, 2014.

Status:	**Accepted/Not Accepted**

Guide Name: **Panel Name:**

Signature: **Signature:**

RASHTREEYA SIKSHANA SAMITHI TRUST ® RV INSTITUTIONS